Foster ARTIST PLUS - SPARE PARTS

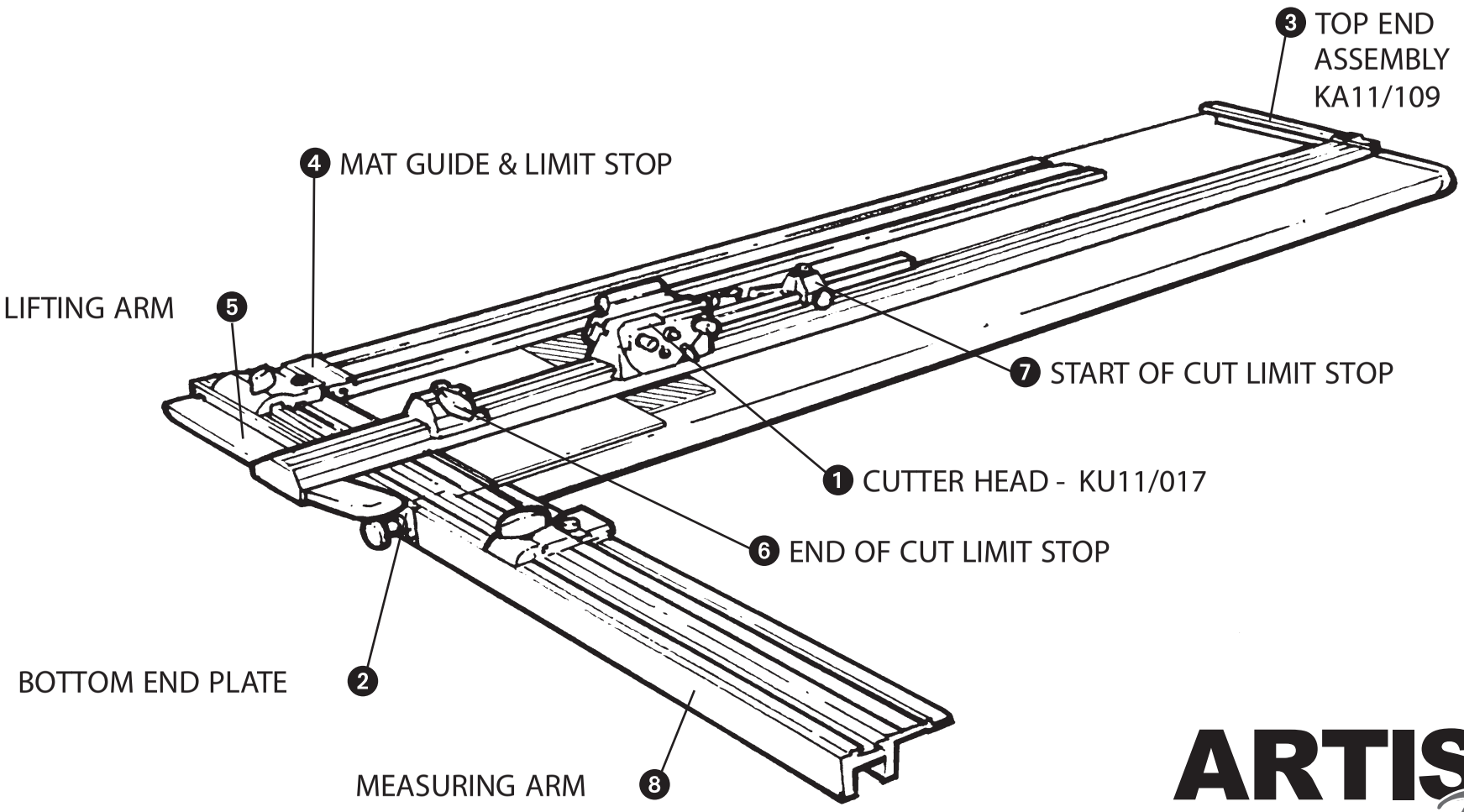

ARTIST Plus

Foster

❹ MAT GUIDE LIMIT STOP ASSEMBLY , ❺ LIFTING HANDLE/ CUTTER BAR ASSEMBLY, ❻ END OF CUT LIMIT STOP

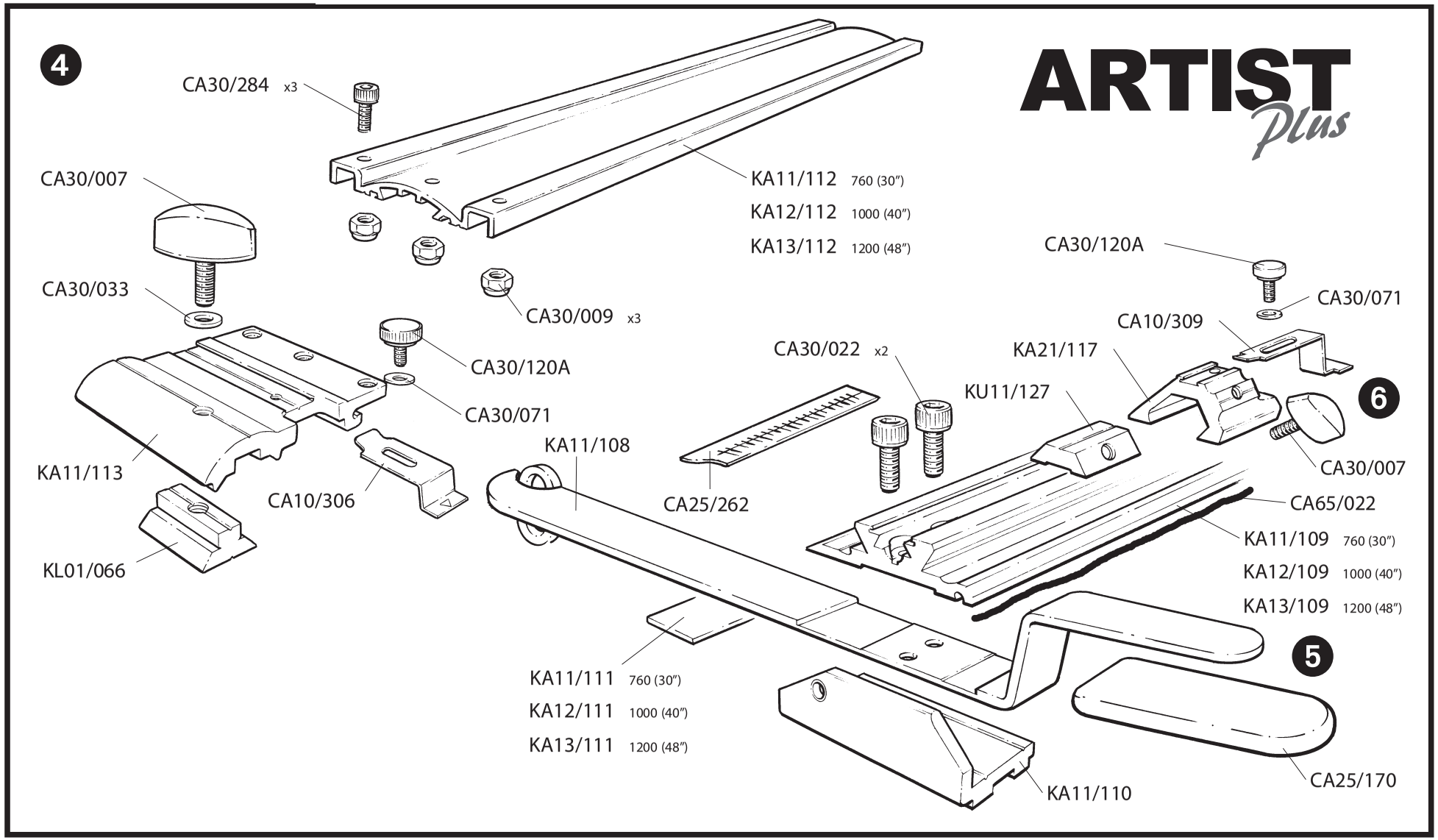

Foster
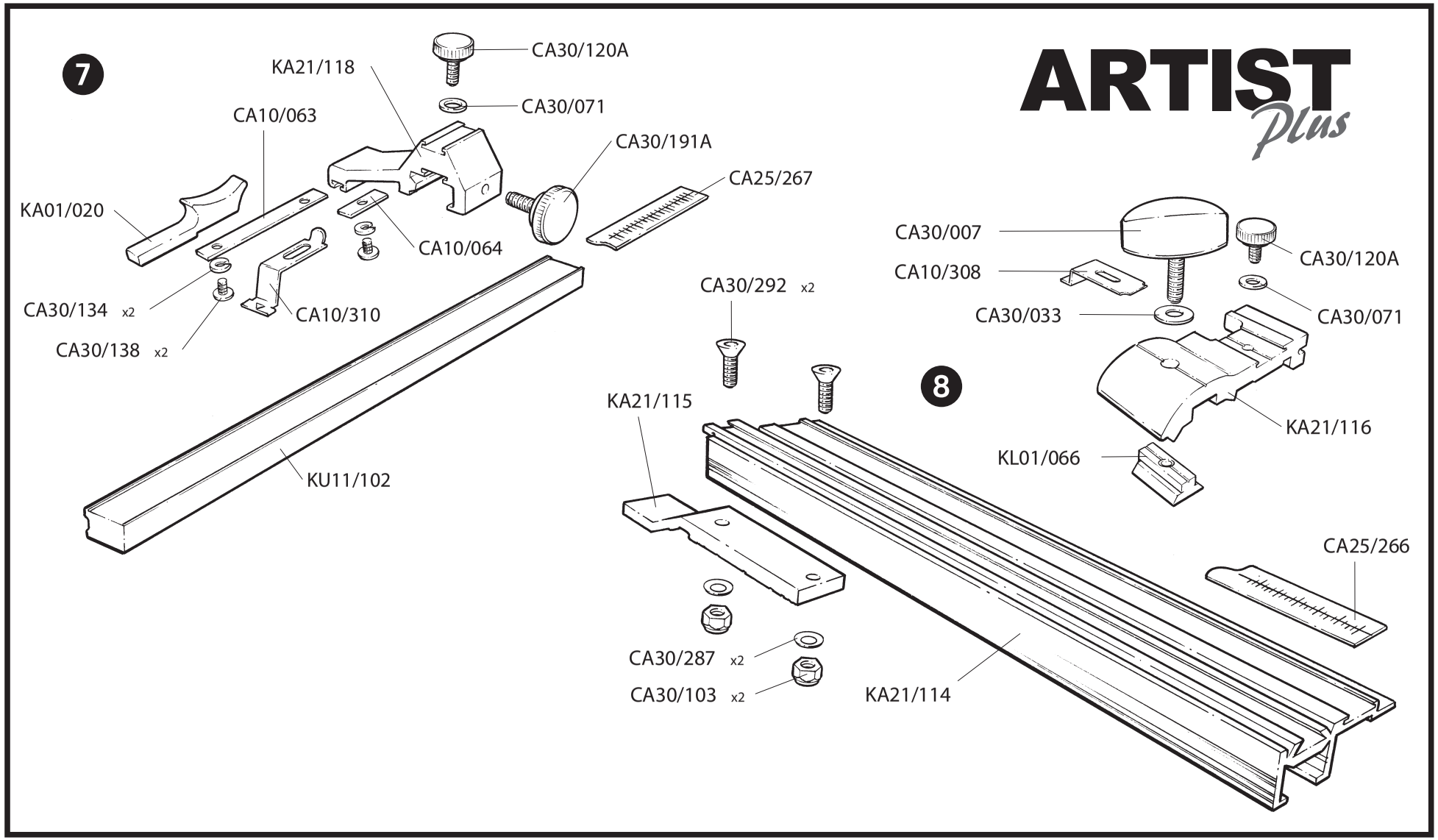
7 START OF CUT LIMIT STOP ASSEMBLY
8 MEASURING ARM ASSEMBLY